REMEHA PRESSURE JET RANGE

P Series

Pressure Jet Range

Gas, Oil and Dual fuel pressure jet three-pass cast iron sectional boiler with low NOx emissions

PRESSURE JET OUTPUTS
P 320: 70-330 kW
P 420: 334-780 kW
P 520: 696-1450 kW

remeha

Introduction

The Remeha P Series Range are a family of advanced technology boilers. The P Series Range are Oil or Gas fired pressure jet three-pass cast iron sectional boilers. In each boiler the combustion chamber is shaped to correspond with modern burner flame patterns, allowing for optimum combustion and giving low NOx emissions.

Contents

Boiler Description

The Remeha Pressure Jet Range are high efficiency pressurised hot water boilers suitable for use with natural gas, light oil and bio fuel, by means of a pressure jet burner.

Nominal output of the P 320 boilers is between 55 and 330 kW, the P 420 boilers is between 250 and 780 kW and the P 520 boilers is between 754 and 1450 kW.

The main boiler casing is steel, with a powder coated enamel finish complete with high quality 80-100mm thick glass wool insulation. The front door is suitable for left or right opening allowing easy access for service operations. The heat exchanger is manufactured from corrosion resistant 'Eutectic' cast iron.

The instrument panel contains all the necessary control and measuring instruments required to control the boiler with the external connections on a terminal strip. The capillaries and sensor wires of the control panel are placed in the instrument pockets fitted at the front of the boiler.

For the discharge of flue gases, chimney draught is not required. Tests have shown that very good combustion results are obtained with zero draught at the boiler outlet.

The boiler is suitable for open and sealed systems up to a maximum pressure of 6 bar and a minimum pressure of 0.8 bar. The boiler is suitable for installation in basement or rooftop plant rooms.

The sizes of boiler parts are such that they can enter the plant room through a normal entrance. The casing and instrument panel are packed separately.

The boiler block consists of cast iron sections which are assembled by means of tapered nipples and ceramic rope.

The boiler is designed on the basis of the triple pass principle for maximum efficiency (gross 83%) and a generously sized combustion chamber for minimising NOx production.

In principle, all EC approved pressure jet burners are suitable subject to boiler capacity and construction.

The boiler meets the requirements of the EC regulations in the following directives:

- 97/23/EC Sound Engineering (article 3.3)
- 90/396/EEC Gas appliance directive.
- 73/23/EEC Electrical low voltage directive.
- 89/336/EEC E.M.C. directive.
- 92/42/EEC Efficiency directive.

Classification type for evacuation of the combustion products: B23.

Typical Boiler Construction

Remeha P 320

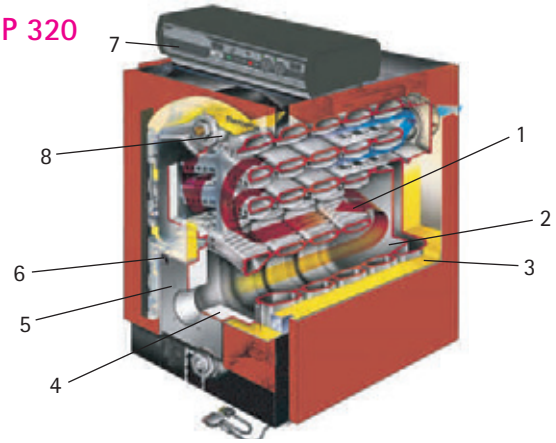

Remeha P 420

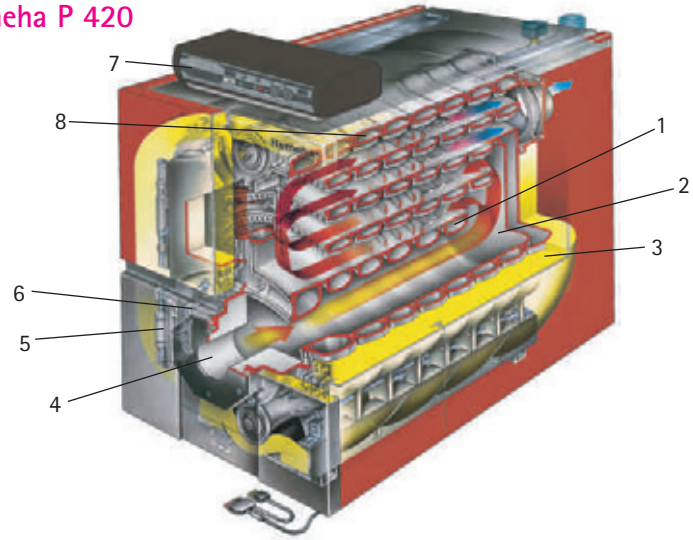

Remeha P 520

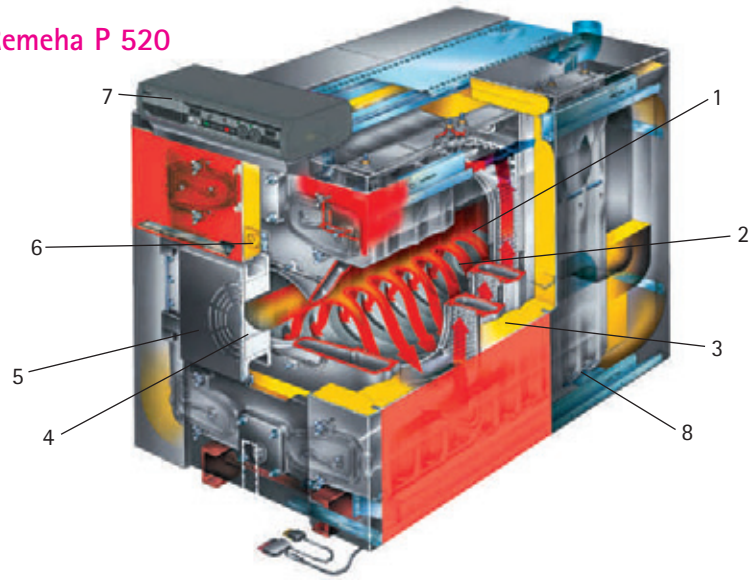

1 Boiler body with pass flue ways
2 Large sized combustion chamber
3 Complete insulated boiler body with fibreglass wool, 100 mm thick
4 Ceramic fibre insulated burner door
5 Hinged burner door fitted (right hand side or left hand side)
6 Flame observation window
7 Control panel designed to enable easy wiring connections
8 Eutectic cast iron body, thermal shock and corrosion resistant, allowing low modulated temperature operation and complete stop between two heating periods

Advantages at a glance

- Boiler body with 3-pass flueways design with a large combustion chamber and horizontal flue passes with fins. The heat transfer is enhanced by the fins and the cast iron baffles
- A high combustion efficiency up to 92%
- A low noise level operation
- Optimal combustion with low NOx and CO2 emissions
- Easy adaptation to traditional burners, as well as new burners with low NOx emissions
- Hinged burner / cleaning door (right hand side or left hand side)
- Eutectic cast iron boiler body provides exceptional resistance to temperature variations, thermal shocks and corrosion
- Safe low modulated temperature operation down to 40°C
- Reinforced fibreglass wool insulation (100 mm) and double insulation of the boiler front which minimises heat loss and allows reduced stand-by consumption and improved thermal efficiency
- Internal electrical duct for wiring connections
- Easy installation for existing or new boiler houses
- The assembly of the sectional boiler body can be carried out anywhere even in boiler houses with difficult access
- A maximum working pressure of 6 bar allows any type of installation
- Each boiler is delivered standard with a pre-set flow switch (P420 and P520 only)
- Volt free wiring connections for external run and lock-out indication

Remeha P 320
Dimensions

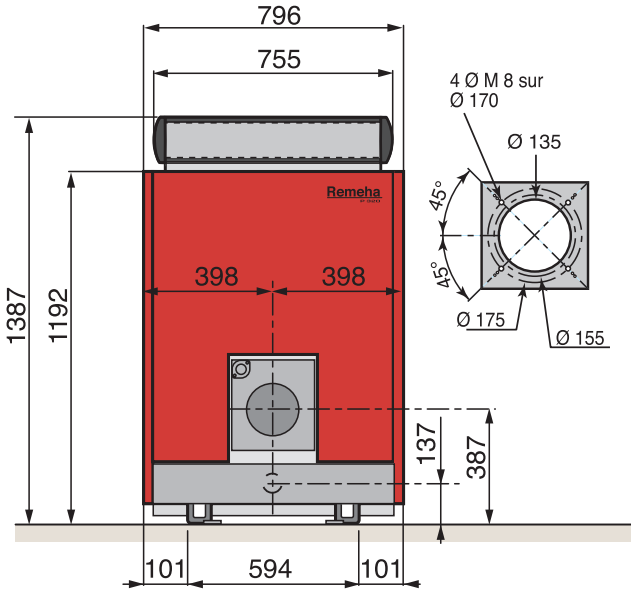

Front View

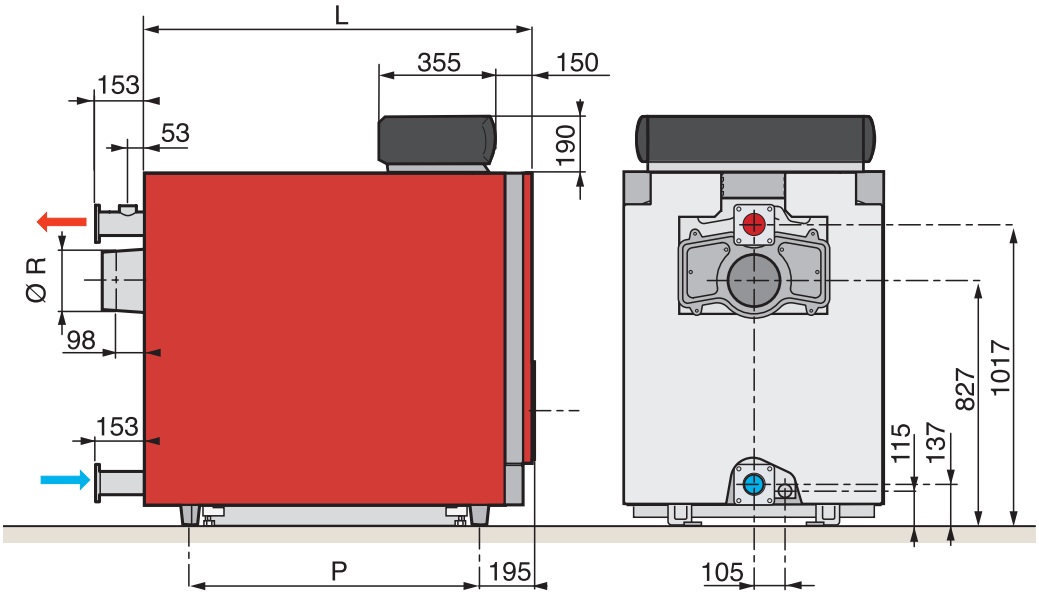

Side View

Rear View

Dimensions of the Sections

Remeha P 320						
Number of sections	4	5	6	7	8	9
L (mm)	838	998	1158	1318	1478	1638
P (mm)	490	650	810	970	1130	1290
ØR (mm)	180	180	180	200	200	200
Flow and Return connection sizes	2.5"	2.5"	2.5"	2.5"	2.5"	2.5"

Technical Data

Maximum operating pressure: 6 bar. Boiler thermostat setting: 30 to 90°C. Safety thermostat setting: 100°C.

Remeha P 320								
Number of Sections			4	5	6	7	8	9
Nominal output		kW	70-105	105-140	140-180	180-230	230-280	280-330
Nominal input		kW	79.5-119.3	119.3-159.1	159.1-204.5	204.5-261.4	261.4-318.2	318.2-375
Efficiency 100% load (NCV)		%	90	89.6	90.4	91	90.7	91.3
Efficiency 30% load (NCV)		%	92.5	92.6	92.6	93.1	93.3	93.4
Water contents		litre	96	116	136	156	176	196
Water resistance	T=10°C[1]	mbar	14	25	46	68	100	143
	T=15°C[1]	mbar	6.2	10.9	20.4	30	44.5	63.8
	T=20°C[1]	mbar	2.6	4.2	8	11	17	26
Pressure in the furnace for nozzle pressure = 0		mbar	+0.3	+0.6	+1.1	+1.6	+2.2	+2.5
Flue gas temperature[1][3]		°C	<210	<210	<210	<210	<210	<210
Mass flue gas flow rate[1][2]	Gas	Kg/h	187	250	321	410	499	588
Combustion chamber diameter		mm	377	377	377	377	377	377
Standing losses	T=30K	%	0.150	0.135	0.125	0.115	0.100	0.085
Dry Weight		kg	610	739	845	980	1101	1228

[1] Nominal operation (Top boiler power)
[2] CO_2 = 13.1 to 13% with fuel oil and 9.5% with natural gas
[3] Boiler temperature 80°C

Minimum Boiler Base Dimensions

Remeha P 320

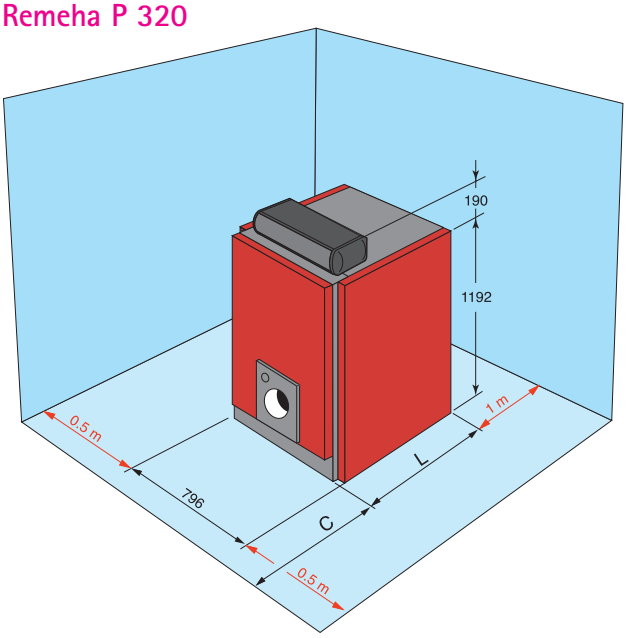

Remeha P 320						
Number of sections	4	5	6	7	8	9
L (mm)	838	998	1158	1318	1478	1638

C min = 1.5 mtrs min and max dependant on make and model of burner

The Remeha P 320 boilers do not require a special base for its assembly. Their closed furnace system means that the floor need not have refractory properties.

All you have to ensure is that the floor can support the weight of the boiler when it is fitted for operation. If the boiler location is not determined precisely, leave enough space around the boiler to facilitate monitoring and maintenance operations.

Remeha P 420
Dimensions

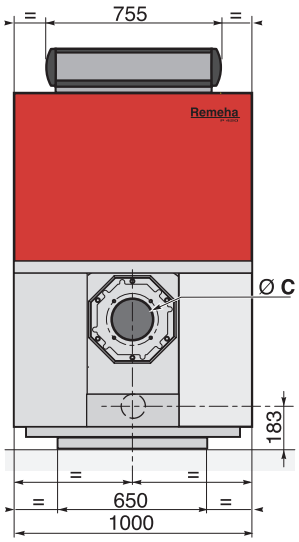

Front View

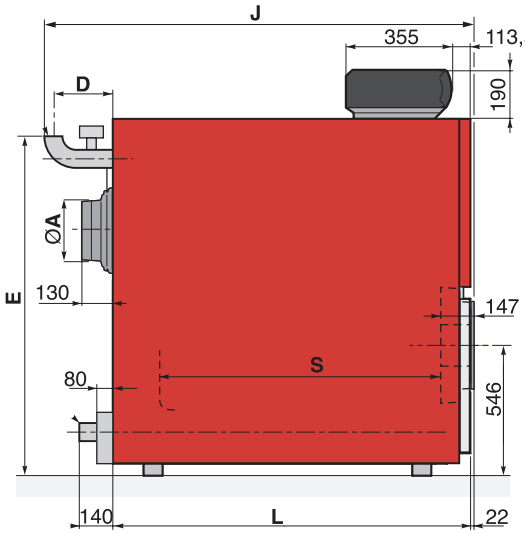

Side View

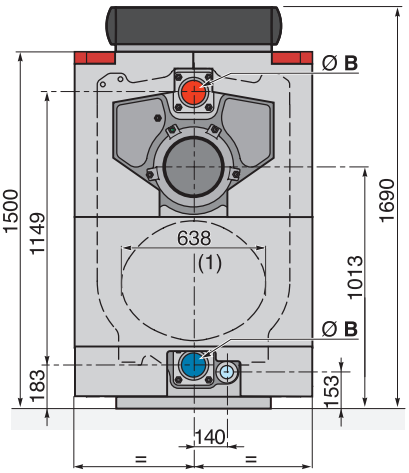

Rear View

Dimensions of the Sections

Remeha P 420							
Number of sections	8	9	10	11	12	13	14
ØA (mm)	250	250	250	300	300	300	300
ØB (mm)	2.5"	2.5"	2.5"	3"	3"	3"	3"
ØC (mm)	Plate intact or pre-drilled to the diameter specified on order						
D (mm)	235	235	235	254	254	254	254
E (mm)	1427	1427	1427	1447	1447	1447	1447
J (mm)	1800	1950	2120	2305	2465	2625	2785
L (mm)	1505	1665	1825	1985	2145	2305	2465
S (mm)	1183	1343	1503	1663	1823	1983	2143

Technical Data

Maximum operating pressure: 6 bar. Boiler thermostat setting: 30 to 90°C. Safety thermostat setting: 110°C.

Remeha P 420									
Number of Sections			8	9	10	11	12	13	14
Nominal output		kW	300-390	390-450	450-540	540-600	600-670	670-720	720-780
Nominal input		kW	334-443	443-511	511-614	614-682	682-761	761-818	818-886
Efficiency 100% load (NCV)		%	89.9	89.6	90.1	89.5	89.2	89.5	89.6
Efficiency 30% load (NCV)		%	92.1	90.9	90.8	91.4	92.2	92.3	92.2
Water contents		litre	366	409	452	495	538	581	624
Water resistance	T=10°C[1]	mbar	37	55	86	105	136	161	204
	T=15°C[1]	mbar	20	27	37	47	62.5	78.5	110
	T=20°C[1]	mbar	9.5	13.5	22.5	27	33.5	40	54
Pressure in the furnace for nozzle pressure = 0[1][3][2]		mbar	+1.1	+1.5	+2.0	+2.5	+2.5	+2.5	+3.5
Flue gas temperature[1][3]		°C	<220	<220	<220	<220	<220	<220	<220
Mass flue gas flow rate[1][2]	Gas	Kg/h	700	810	972	1080	1207	1297	1405
Combustion chamber diameter		mm	530	530	530	530	530	530	530
Standing losses	T=30K	%	0.13	0.12	0.10	0.10	0.10	0.10	0.09
Dry Weight		kg	1470	1650	1830	2010	2190	2370	2550

(1) Nominal operation (Top boiler power)
(2) CO_2 = 13.1 to 13% with fuel oil and 9.5% with natural gas
(3) Boiler temperature 80°C

Minimum Boiler Base Dimensions

Remeha P 420

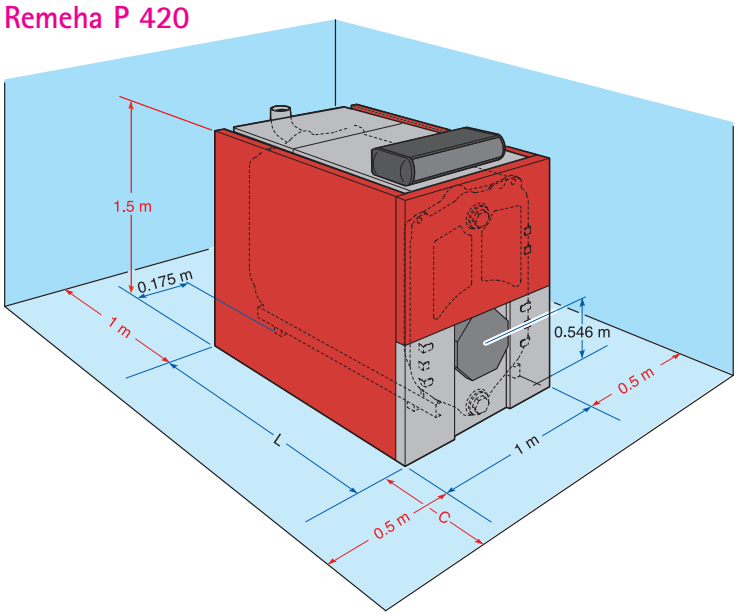

Remeha P 420							
Number of sections	8	9	10	11	12	13	14
L (mm)	1505	1665	1825	1985	2145	2305	2465

C min = 1.5 mtrs min and max dependant on make and model of burner

The Remeha P 420 boilers do not require a special base for its assembly. Their closed furnace system means that the floor need not have refractory properties.

All you have to ensure is that the floor can support the weight of the boiler when it is fitted for operation. If the boiler location is not determined precisely, leave enough space around the boiler to facilitate monitoring and maintenance operations.

Remeha P 520
Dimensions

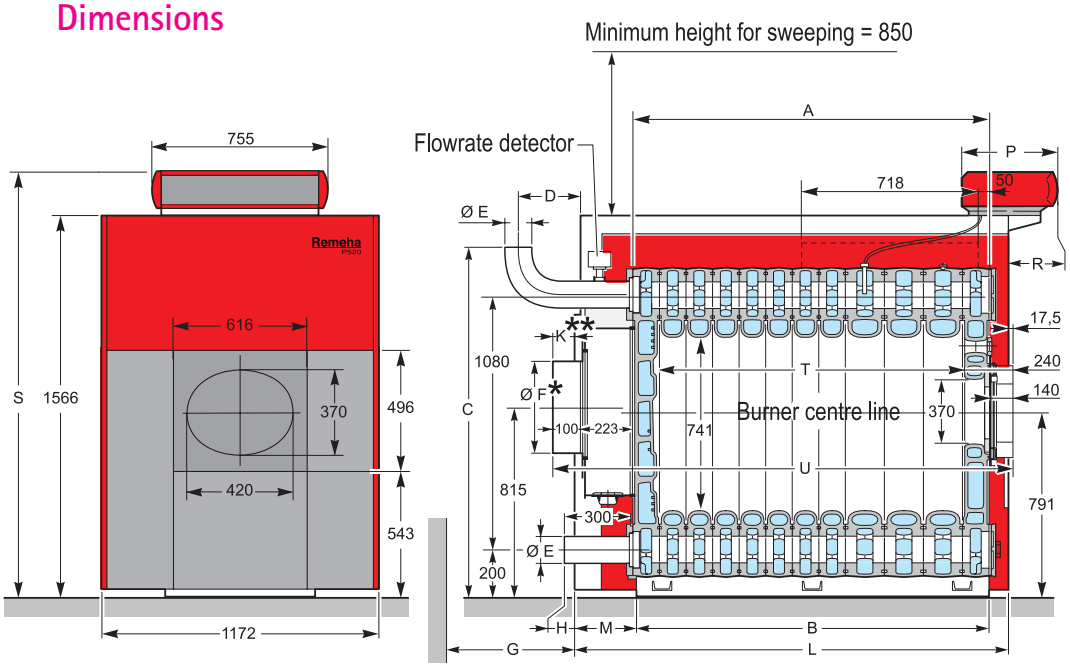

Front View

Side View

Dimensions of the Sections

Remeha P 520							
Number of sections	13	15	17	19	21	23	25
A (mm)	1563	1785	2007	2229	2491	2713	2935
B (mm)	1522	1744	1966	2188	2450	2672	2894
C (mm)	1488	1488	1488	1504	1504	1504	1504
D (mm)	256	188	210	257	209	231	253
ØE (weld) (mm)	139.7	139.7	139.7	159	159	159	159
ØF (mm)	350	400	400	400	*	*	*
G (mm)	-	150	370	370	650	980	980
H (mm)	37	-31	-9	13	-35	-13	9
K** (mm)	49	-19	3	25	-23	-1	21
L (mm)	1955	2245	2445	2645	2955	3155	3355
M (mm)	275	324	321	299	324	324	303
P (mm) K	355	355	355	355	355	355	355
R (mm) K	175	175	175	175	175	175	175
S (mm) K	1760	1760	1760	1760	1760	1760	1760
T (mm)	1372	1594	1816	2038	2300	2522	2744
U (mm)	2021.5	2243.5	2465.5	2687.5	2949.5	3171.5	3393.5

* Plain plate, requires cutting. Maximum cut-out 500 x 700.

** Dimension representing the end of the 100 mm long chimney connection.

G = Length required for clearing the water distributing tube.

Note : with models P 520-21, P 520-23 and P 520-25, a plain plate which must be cut out is supplied without the 100 mm chimney connection.

Technical Data

Maximum operating pressure: 7.5 bar. Boiler thermostat setting: 30 to 90°C. Safety thermostat setting: 110°C.

Remeha P 520									
Number of Sections			13	15	17	19	21	23	25
Nominal output		kW	696-754	812-870	928-986	1044-1102	1160-1218	1276-1334	1392-1450
Nominal input		kW	773-838	902-967	1031-1096	1160-1224	1289-1353	1418-1482	1547-1611
Efficiency 100% load (NCV)		%	90.7	90	90.2	90.6	91.2	91.1	90.9
Efficiency 30% load (NCV)		%	94	94.3	94.3	94.6	94.7	94.2	95.1
Water capacity		litre	617	693	769	845	943	1019	1095
Water resistance	T=10°C	mbar	57.6	77.6	30.2	41.4	53.6	64.8	78.4
	T=15°C	mbar	25.8	34.7	13.5	18.5	24	29	35
	T=20°C	mbar	14.4	19.4	7.6	10.4	13.4	16.2	19.6
Pressure in the furnace for nozzle pressure = 0		mbar	2.2	2.4	2.6	2.85	3.1	3.3	3.5
Flue gas temperature[1][3]		°C	<190	<190	<190	<190	<190	<190	<190
Mass flue gas flow rate[1][2]	Fuel oil	Kg/h	1070	1220	1370	1520	1670	1820	1970
	Gas	Kg/h	1120	1280	1440	1590	1750	1910	2070
Standing losses	T=30K	%	0.08	0.07	0.07	0.07	0.06	0.06	0.06
Dry Weight		kg	3000	3364	3756	4124	4538	4930	5297

(1) Nominal operation (Top boiler power)
(2) CO_2 = 13.1 to 13% with fuel oil and 9.5% with natural gas
(3) Boiler temperature 80°C

Minimum Boiler Base Dimensions

Remeha P 520

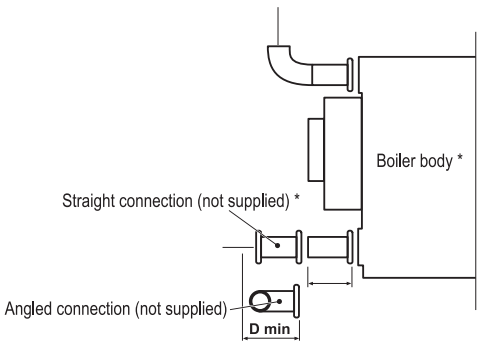

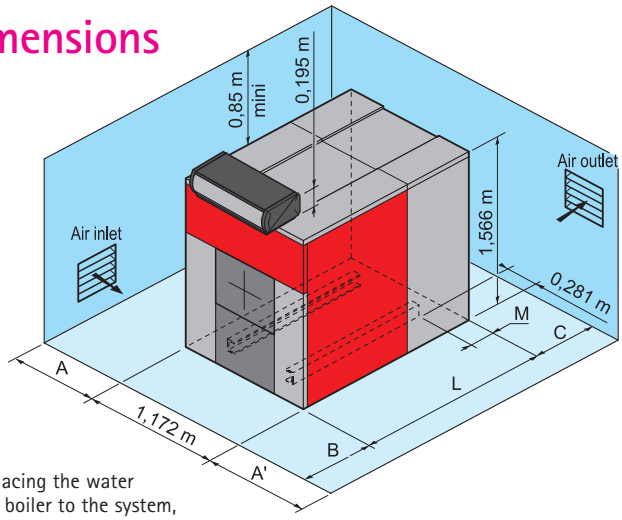

* In order to facilitate subsequent work on the boiler(replacing the water distributing tube etc.) use a flanged connection from the boiler to the system, making sure you comply with minimum clearance dimension D.

If A = 1.2 m (door opening side), A' = 0.5 m

If A = 0.5 m, A' = 1.2 m (door opening side) : adapt the dimensions on the basis of the dimensions of the burner when the door is open.

B = 1.5 m : adapt the dimensions on the basis of the dimensions of the burner.

Remeha P 520							
Number of sections	13	15	17	19	21	23	25
L (mm)	1955	2245	2445	2645	2955	3155	3355
M (mm)	275	324	321	299	324	324	303
C min.	300	436	656	656	936	1266	1266
D min.	-	136	356	356	636	966	966

For the assembly and because of their design, P 520 boilers require no special base. Their closed furnace system means that the floor need not have refractory properties. All you have to ensure is that the floor can support the weight of the boiler when it is fitted for operation. If the boiler location is not determined precisely, leave enough space around the boiler to facilitate monitoring and maintenance operations.

Application Information

The Pressure Jet Range can be used on all new and refurbishment projects in both single and multiple configurations.

Maximum water temperature is 90°C. The minimum return water temperature for gas fired boilers is 40°C and for oil fired boilers 40°C, at a flow rate corresponding to a Δt of 20°C at nominal heat output.

To prevent high limit thermostat operating a minimum water flow is required.

$$\frac{\text{Output boiler in kW}}{70} = m^3/h$$

This minimum flow must be maintained for 5 minutes after the burner stops firing to avoid high temperature shut-down due to residual heat gain. The design and manufacture of the boiler ensures that no specific minimum water flow requirement exists other than that for high temperature protection.

Instrument Panels

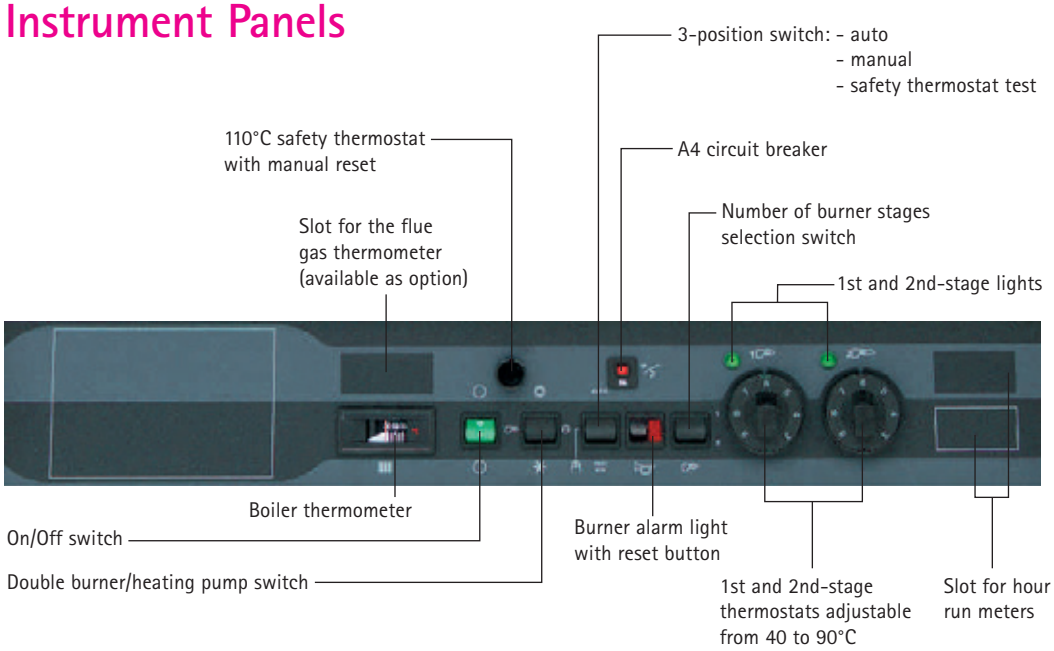

External Connections

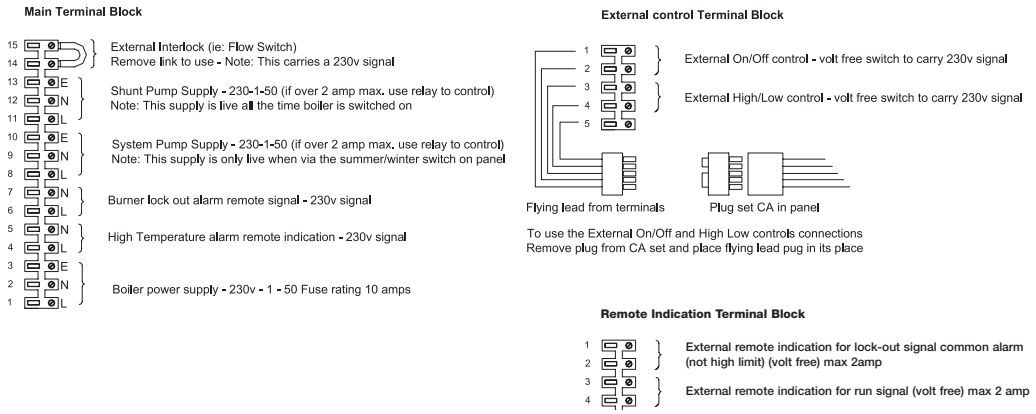

Water Treatment

The system should be filled with mains cold water (for the UK this will usually have a pH of between 7 and 8). Pressurised installations with a boiler/system content ratio of 1:10 or less should not require water treatment, provided that the following conditions apply:

1. The system is flushed thoroughly to remove all fluxes and debris and then filled completely once.
2. Make up water is limited to 5 % per annum.
3. The hardness of the water does not exceed 360 ppm (20°D).

All scale deposits will reduce the efficiency of the boiler and should be prevented. However provided the above is complied with any scale produced will not be too detrimental to the boiler efficiency and will not reduce the anticipated life expectancy of the boiler.

Note: Scale deposits in excess of 3 to 5 mm will reduce boiler efficiency and greatly increase the risk of premature casting failure.

As most systems contain a variety of metals which can react with each other to cause corrosion, it is considered good practice to provide some form of water treatment (especially in open vented systems) in order to prevent or reduce the following:

- Metallic corrosion;
- Formation of scale and sludge;
- Microbiological contamination;
- Chemical changes in the untreated system water.

Suitable chemicals and their use should be discussed with a specialist water treatment company prior to carrying out any work. The specification of the system and manufacturers recommendations must be taken into account, along with the age and condition of the system.

New systems should be flushed thoroughly to remove all traces of flux, debris, grease and metal swarf generated during installation. Care to be taken with old systems to ensure any black metallic iron oxide sludge and other corrosive residues are removed, again by thoroughly flushing, ensuring that the system is drained completely from all low points.

Note: Please ensure that the new boiler plant is not in circuit when the flushing takes place, especially if cleansing chemicals are used to assist the process.

UNDER NO CIRCUMSTANCES IS THE BOILER TO BE OPERATED WITH CLEANING CHEMICALS IN THE SYSTEM.

To Summarise:

- Minimise water loss
- Prevent pumping over in open vented systems
- Provide adequate air venting at all high points
- Keep pH level between 7 - 9 when using additives
- Maximum chlorine content of 200 mg/l
- Take advice on the suitability of inhibitors

TreadLightly
ON THE PLANET

Broag Ltd. Head Office

Remeha House
Molly Millars Lane
Wokingham
Berkshire RG41 2QP
T: 0118 978 3434
F: 0118 978 6977
E: boilers@broag-remeha.com

www.remeha.co.uk

Issue 6 date: 27/07/09

remeha

Printed on Recycled Paper

ISO 9001 since 1988 CE climatecare

Remeha is committed to carbon offsetting

Designed and produced by Sans Frontiere Marketing Communications - 01273 487 800 - www.sansfrontiere.co.uk